# FIOD 0008 Manual

The FIOD series products add digital capability to your PLC / SCADA.

**FIOD 0008** model has 8 relay outputs. The digital outputs are isolated from the host device. It has one (2 Wire RS485) communication port. The COM port is used to connect any modbus master device (PLC / SCADA / Operator Interface device). This module supports Modbus RTU (Slave) protocol.

**Renu Electronics Private Limited**
Survey No. 2/6, Baner Road, Pune – 411 045
Maharashtra, INDIA Tel: +91 20 2729 2840 Fax: +91 20 2729 2839
E-mail: support@renuelectronics.com Website: www.renuelectronics.com

## Dimensional Details:

FIOD units are shipped with a separate DIN rail plate which can be attached to the unit, if desired. User can use the unit with or without the DIN rail plate. Following sketch shows dimensional details of FIOD with the DIN rail plate.

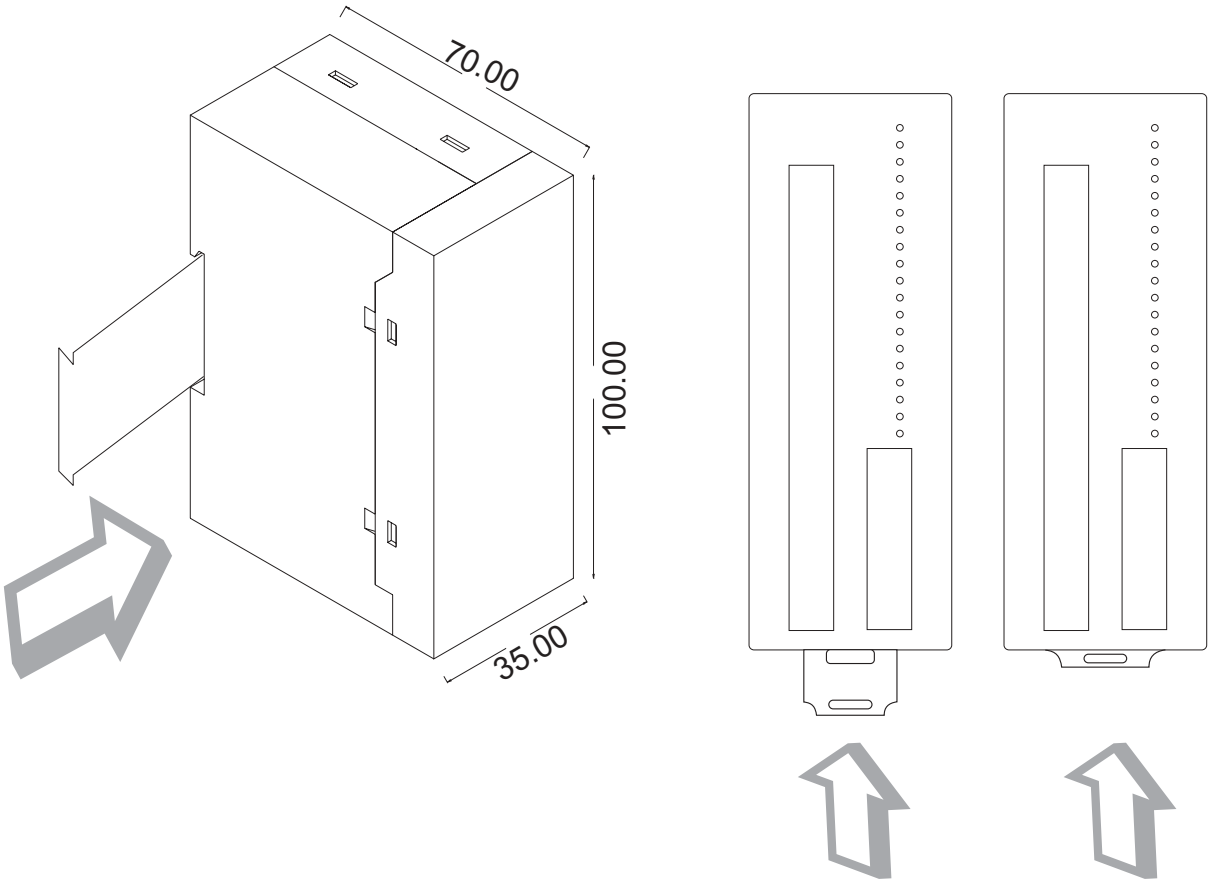

**PLC Communication**

The unit supports Modbus RTU (Slave) protocol. Dedicated modbus registers are used for tracking outputs. The data is received from the output register and accordingly the digital outputs are set / reset.
The communication parametes and unit address are set by DIP switch.

**Specifications: -**

| | | | |
|---|---|---|---|
| 1. | Power Supply | : | 24 VDC +/- 10% |
| 2. | Digital Outputs | : | 230V AC; 5 Amp. / 30V DC; 5 Amp.<br>Coil Voltage: 24VDC |
| 3. | Communication Port | : | 2 Wire RS-485 |
| 4. | I/O Terminals | : | Pluggable terminals. |
| 5. | Operating Temperature | : | $0^{O}C$ to $60^{O}C$ |
| 6. | Storage Temperature | : | $-20^{O}C$ to $80^{O}C$ |
| 7. | Humidity | : | 10% to 90% (Non condensing) |
| 8. | Mounting | : | DIN rail mounting |
| 9. | Dimensions (DIN rail) | : | 70 X 100 X 35 mm |

**Communication Parameters And Modbus Tag Definition**

Unit supports MODBUS driver for communication with Master device.

**COM Port Setting:**

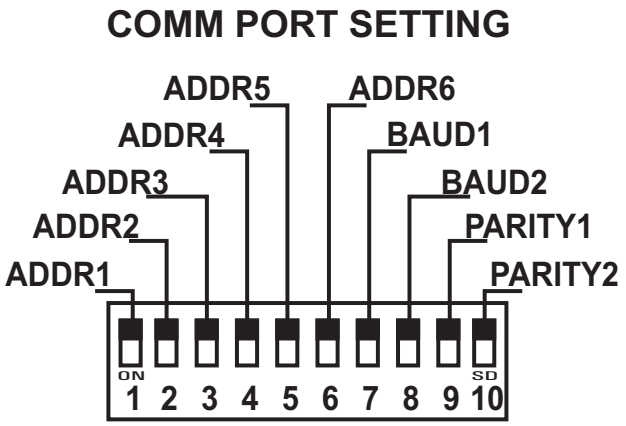


| UNIT ID | ADDR6 | ADDR5 | ADDR4 | ADDR3 | ADDR2 | ADDR1 |
|---|---|---|---|---|---|---|
| 1 | 0 | 0 | 0 | 0 | 0 | 0 |
| 2 | 0 | 0 | 0 | 0 | 0 | 1 |
| . | . | . | . | . | . | . |
| . | . | . | . | . | . | . |
| . | . | . | . | . | . | . |
| . | . | . | . | . | . | . |
| 64 | 1 | 1 | 1 | 1 | 1 | 1 |

| BAUD RATE | BAUD2 | BAUD1 |
|---|---|---|
| 9600 | 0 | 0 |
| 19200 | 0 | 1 |
| 57600 | 1 | 0 |
| 115200 | 1 | 1 |

| PARITY | PARITY2 | PARITY1 |
|---|---|---|
| NONE | 0 | 0 |
| ODD | 0 | 1 |
| EVEN | 1 | 0 |

The following dedicated modbus registers are assigned to digital outputs.

| **Digital O/P** | **MODBUS Tag.** | |
|---|---|---|
| | **Output Register** | **Output Coil** |
| O/P1 (Y0) | 40065_0 (Bit 0) | 1025 |
| O/P2 (Y1) | 40065_1 (Bit 1) | 1026 |
| O/P3 (Y2) | 40065_2 (Bit 2) | 1027 |
| O/P4 (Y3) | 40065_3 (Bit 3) | 1028 |
| O/P5 (Y4) | 40065_4 (Bit 4) | 1029 |
| O/P6 (Y5) | 40065_5 (Bit 5) | 1030 |
| O/P7 (Y6) | 40065_6 (Bit 6) | 1031 |
| O/P8 (Y7) | 40065_7 (Bit 7) | 1032 |

| Modbus Tag | Name of the tag | Type | Default | Valid Range | Description |
|---|---|---|---|---|---|
| 40070 | Communication Timeout for own frame | Retentive | 0 | (1 to 65535) times multiple of 100msec | Holds the communication timeout value. If unit doesn't reveive it's own frame within this timeout period, it declares communication break. |
| 40071 | Communication timeout for ideal communication line | Retentive | 0 | (1 to 65535) times multiple of 100msec. | Holds the communication timeout value. If communication line is completely ideal (No frame from master for other slaves also) within this timeout period, unit declares communication break. |
| 40072_bit0 OR Coil 01137 | Selection bit | Retentive | 0 | 1 or 0 | If 1, timeout value from 40070 is selected<br>If 0, timeout value from 40071 is selected |

*Note:*
*The default timeout is 10sec.*
*In case of communication break with the host all the outputs are switched OFF after the timeout period is over.*

## Port Details (2 Wire RS485 Port): -

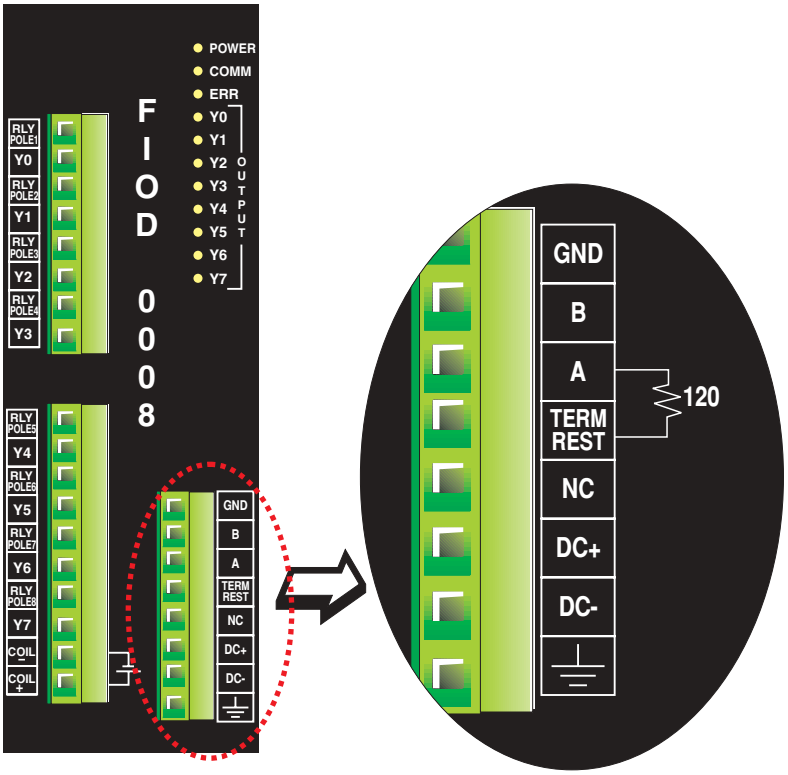


For using internal termination resistor (120 Ohm), short “B” and “TERM REST”

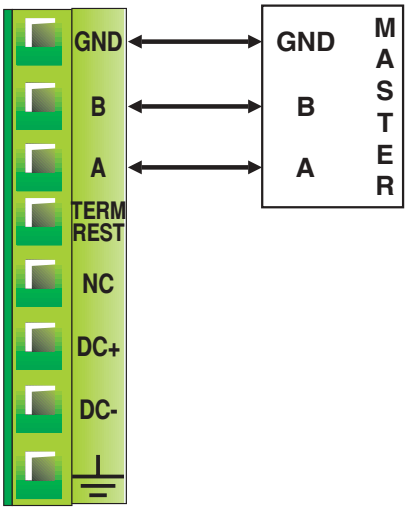

**Multidropping connection: -**

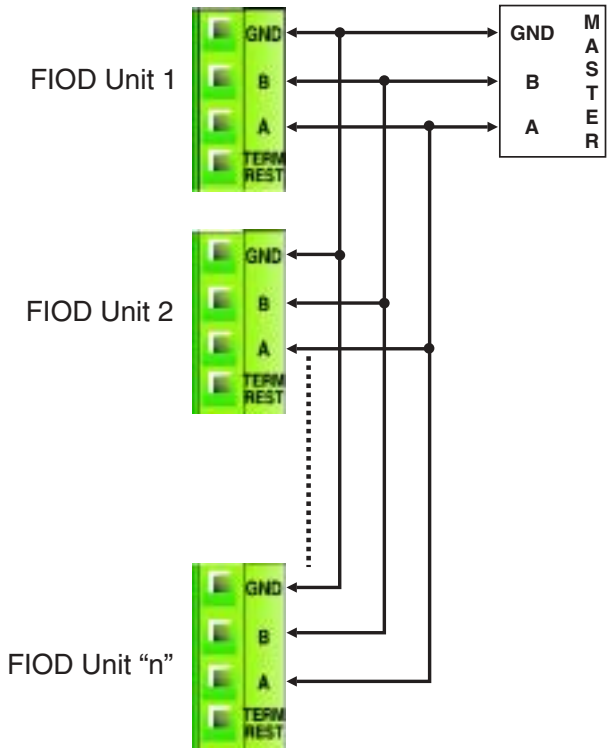


***Note: Where "n" is up to 32. Connecting repeater can increase it to 64.***

**Power Supply Connection: -**

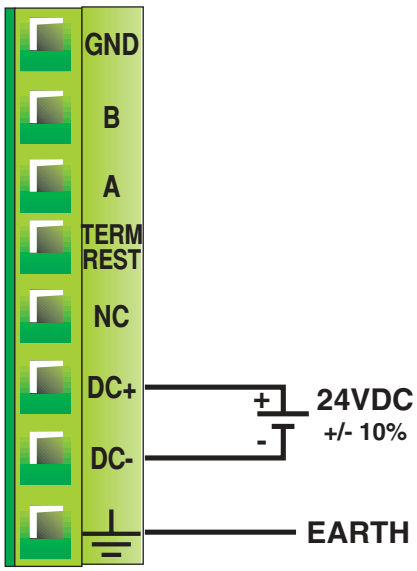

**Wiring Diagram: -**
Relay type Digital outputs should be wired as shown below

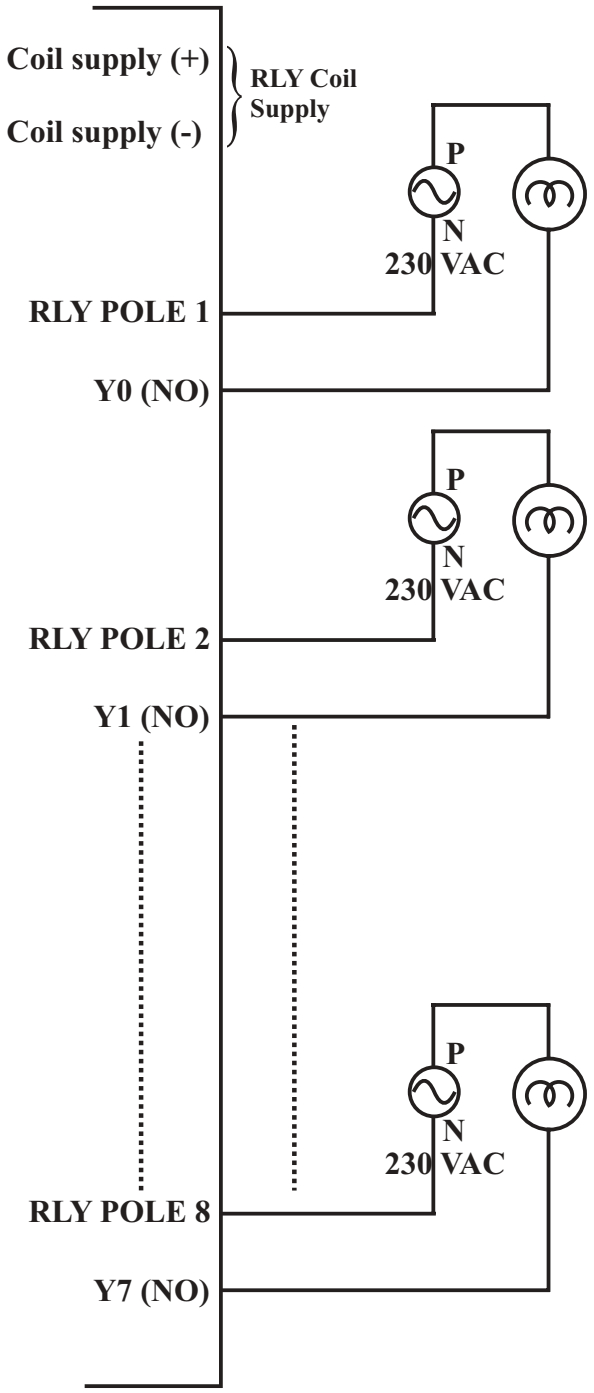

**Notes:**

***MANUAL REVISION***

If you contact us in reference to this manual, please include the following document number

| | | |
|---|---|---|
| Name | : | User Manual For FIOD0008 |
| Part Number | : | URML405 |
| Document | : | UMAN\FIOD-0008\1206 |
| Revision | : | 1 |

| Revision Number | Document Number | Date | Description |
|---|---|---|---|
| Rev 0 | UMAN\FIOD-0008\1206 | 29-12-2006 | First Release |
| Rev 1 | UMAN\FIOD-0008\1206 | 05-01-2007 | Communication timeout register is added. |