BASRT-B

BAS Router

BACnet® Multi-network Router

Installation Guide

TD071200-0IK

For Firmware Versions 2.x

CONTEMPORARY CONTROLS®

Trademarks

Contemporary Controls, ARC Control, ARC DETECT, BASautomation, EXTEND-A-BUS, RapidRing, and CTRLink are trademarks or registered trademarks of Contemporary Control Systems, Inc. Specifications are subject to change without notice. Other product names may be trademarks or registered trademarks of their respective companies. BACnet is a registered trademark of the American Society of Heating, Refrigeration, and Air-Conditioning Engineers, Inc. (ASHRAE).

TD071200-0IK 21 February 2012

Copyright

© Copyright 2011 by Contemporary Control Systems, Inc. All rights reserved. No part of this publication may be reproduced, transmitted, transcribed, stored in a retrieval system, or translated into any language or computer language, in any form or by any means, electronic, mechanical, magnetic, optical, chemical, manual, or otherwise, without the prior written permission of:

Contemporary Control Systems, Inc.
2431 Curtiss Street
Downers Grove, Illinois 60515 USA
Tel: 1-630-963-7070
Fax: 1-630-963-0109
E-mail: info@ccontrols.com
Web: www.ccontrols.com

Contemporary Controls Ltd
14 Bow Court
Fletchworth Gate, CV5 6SP, UK
Tel: +44 (0)24 7641 3786
Fax: +44 (0)24 7641 3923
E-mail info@ccontrols.co.uk
Web: www.ccontrols.co.uk

Contemporary Controls (Suzhou) Co. Ltd
11 Huoju Road, Science & Technology Park
New District, Suzhou, PR China 215009
Tel: +86-512-68095866
Fax: +86-512-68093760
E-mail: info@ccontrols.com.cn
Web: www.ccontrols.com.cn

Contemporary Controls GmbH
Fuggerstraße 1 B
04158 Leipzig, Germany
Tel: +49 0341 520359 0
Fax: +49 0341 520359 16
E-mail info@ccontrols.de
Web: www.ccontrols.de

Disclaimer

Contemporary Control Systems, Inc. reserves the right to make changes in the specifications of the product described within this manual at any time without notice and without obligation of Contemporary Control Systems, Inc. to notify any person of such revision or change.

Contents

1 Introduction 4
2 Specifications 5
2.1 Electrical 5
2.2 Environmental 5
2.3 Mounting 5
2.4 Functional 5
2.5 Regulatory Compliance 5
2.6 Electromagnetic Compatibility 5
2.7 Connectors 6
2.8 Mechanical 6
3 Power 7
3.1 POWER SUPPLY PRECAUTIONS 7
3.2 Limited Power Sources 10
4 LEDs 10
5 Operation 11
5.1 MS/TP Port 11
5.2 Ethernet Port 12
5.3 Reset Switch 12
6 Webpage Configuration 13
6.1 Device Parameters 16
6.2 BACnet Ethernet 16
6.3 BACnet/IP Parameters 17
6.4 MS/TP Parameters 18
7 Advanced Features 20
7.1 Advanced Configuration Page 20
7.2 Status Screen 22
7.3 Security Screen 23
8 Warranty 24
9 Returning Products for Repair 24
10 Declaration of Conformity 24

1 Introduction

The BASRT-B is a multi-network router, sharing messages among BACnet/IP, BACnet Ethernet and MS/TP networks. The router is configurable via its internal webpage.

The BASRT-B comes in a metal case, is DIN-rail mounted and is powered from a 24 VAC/VDC source. It has one isolated MS/TP port and one 10/100 Mbps Ethernet Auto-MDIX port.

The MS/TP port offers a 3-pin terminal block with a removable plug for the EIA-485 connection. Through this port, up to 254 devices can be addressed — as many as 31 full-load devices on the attached segment. All MS/TP baud rates (as stated in the BACnet standard) are supported.

The Ethernet port offers a shielded RJ-45 connector. Through auto-negotiation and Auto-MDIX, it automatically matches its duplex setting, data rate and communication pair usage to whatever is needed by the attached equipment. Thus, only a straight-through CAT5 cable is needed for hook-up.

The BASRT-B features a user-accessible switch to reset the IP address, subnet mask, gateway address and User ID/Password to the factory defaults.

Three LEDs are present: A power LED glows green when proper power is provided. The Ethernet LED glows green for 100 Mbps operation and yellow for 10 Mbps and flashes to indicate activity. A green LED flashes when MS/TP traffic is received.

Each unit complies with Class A radiated and conducted emissions as defined by EN55022 and CFR 47, Part 15, and is intended for use in non-residential areas.

A BACnet Broadcast Management Device (BBMD) within the router can be enabled to allow BACnet communication across routed IP networks (ones with multiple IP subnets). If all IP devices use the same subnet, this functionality can be left disabled. The router also supports Foreign Device Registration.

2 Specifications

2.1 Electrical (Class 2 Circuits Only)

INPUT	DC	AC
Voltage (±10%):	24 V	24 V
Power:	2 W	4 VA
Frequency:	N/A	47–63 Hz

2.2 Environmental

Operating temperature:	0°C to 60°C
Storage temperature:	–40°C to +85°C
Relative humidity:	10–95%, non-condensing

2.3 Mounting

TS-35 DIN-rail

2.4 Functional

	Ethernet	*MS/TP*
Physical Layer:	10BASE-T 100BASE-TX	*EIA-485*
Cable length limit:	100 m	*1200 m (for AWG 18)*
MS/TP Baud rate (bps):	9600, 19200, 38400, 76800	
MS/TP node limit:	254 devices total, 31 full-load devices per segment	
MS/TP LED:	flashing green = receive valid activity	
Ethernet LED:	green = 100 Mbps yellow = 10 Mbps flashing = activity	

2.5 Regulatory Compliance

CE Mark; RoHS; CFR47, Part 15 Class A

2.6 Electromagnetic Compatibility

Each unit complies with Class A radiated and conducted emissions as defined by EN55022 and CFR 47, Part 15. This equipment is intended for use in non-residential areas.

Warning This is a Class A product as defined in EN55022. In a domestic environment this product may cause radio interference in which case the user may be required to take adequate measures.

2.7 Connectors

3-pin (MS/TP) Pin Assignments

(Also explained on product label)

Figure 1 — 3-pin Connector

RJ-45 (MDI Ethernet) Pin Assignments

1	TD +	3	RD +
2	TD –	6	RD –

(All other pins are unused.)

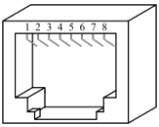

Figure 2 — RJ-45 Connector

USB Mini B Connector (Aux)

This connector is only used for firmware upgrades.

Figure 3 — USB Connector

EIA-485 Bias and Termination Jumpers

U Install jumper to apply pull-up bias.
T Install jumper to terminate bus.
D Install jumper to apply pull-down bias.

(All jumpers are installed by default.)

Figure 4 — Internal Jumpers

2.8 Mechanical

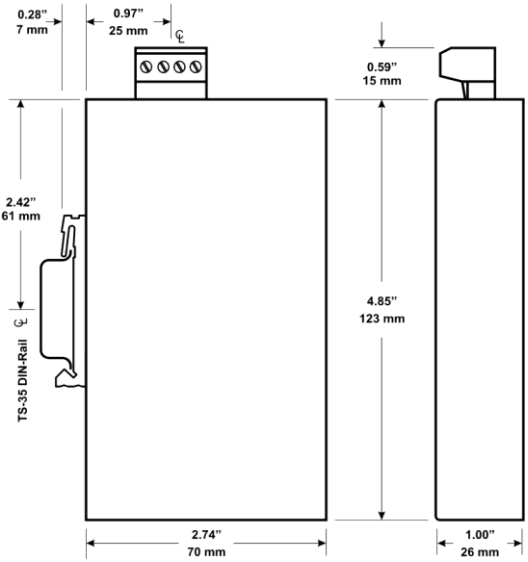

Figure 5 — Product Dimensions

3 Power

The BASRT-B requires 24 VAC or 24 VDC (see *Figure 6*) while drawing no more than 4 VA of power. The recommended conductor size is 16–18 AWG. COM is directly connected to zero volts and the chassis is DC isolated from zero volts. Input connections are reverse-polarity protected.

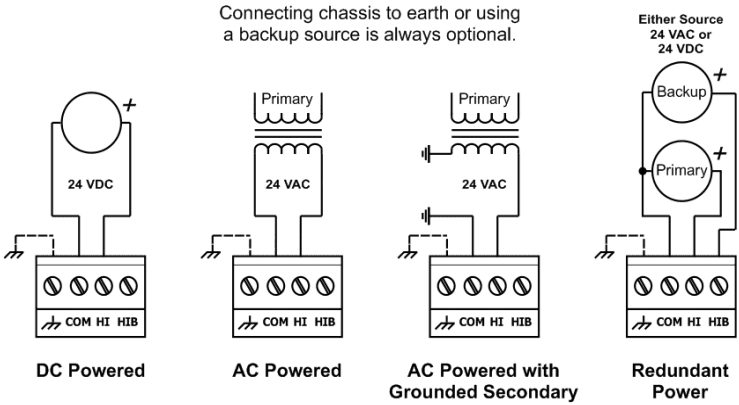

Figure 6 — Power Options

WARNING: Powering devices can present hazards. Read the following text carefully.

3.1 POWER SUPPLY PRECAUTIONS

Internally, the router utilizes a half-wave rectifier and therefore can share the same AC power source with other half-wave rectified devices. Sharing a common DC power source is also possible. Sharing AC power with full-wave rectified devices is NOT recommended. Full-wave rectified devices usually require a dedicated AC power source that has a secondary elevated above ground. Both secondary connections are considered HOT.

AC power sources that power several half-wave devices have a common secondary connection called either COMMON, LO, or GROUND. This connection might be tied to frame ground or earth. The other side of the secondary is considered the HOT or HI

side of the connection. Connect the HOT side of the secondary to either the HI or the HIB input on the router and the LO side to COM on the router. All other half-wave devices sharing the same AC power source need to follow the same convention. When using a DC power source, connect the positive terminal of the source to either the HI or the HIB input and the negative terminal to COM on the router. Reversing polarity to the router will not damage the router. If shielded cable is used, it is recommended to tie all shield segments together and connect one of the shield ends to chassis while taping back the other.

For MS/TP devices that share a power source with the BASRT-B, see *Figure 7* for proper 2-wire bus connections and *Figure 8* for proper 3-wire bus connections.

WARNING: Devices powered from a common AC source could be damaged if a mix of half-wave and full-wave rectified devices exist. If you are not sure of the type of rectifier used by another device, do not share the AC source with it.

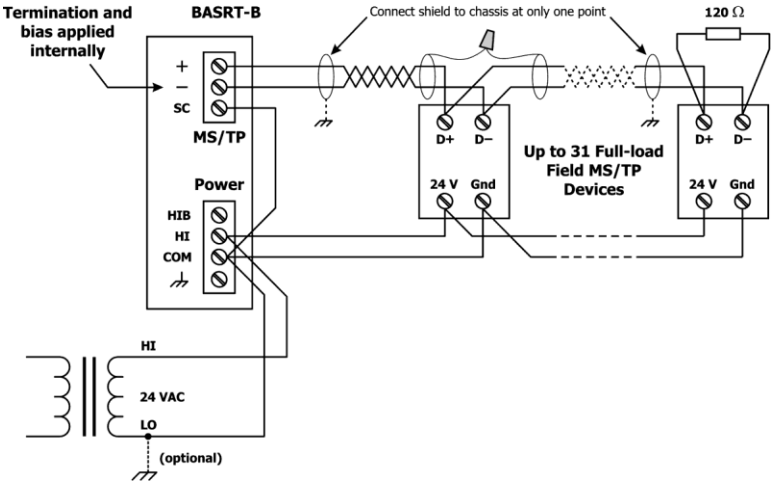

Figure 7 — 2-wire MS/TP Bus with Shared Power Source

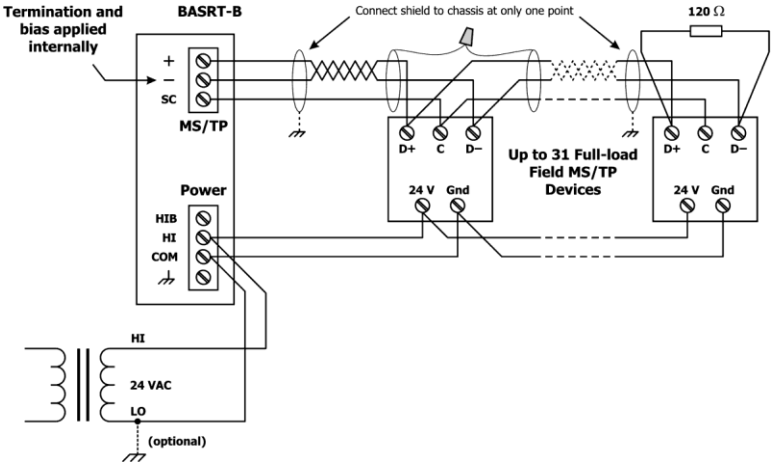

Figure 8 — 3-wire MS/TP Bus with Shared Power Source

For MS/TP devices that use a power source separate from the BASRT-B, see *Figure 9* for proper 2-wire bus connections and *Figure 10* for proper 3-wire bus connections.

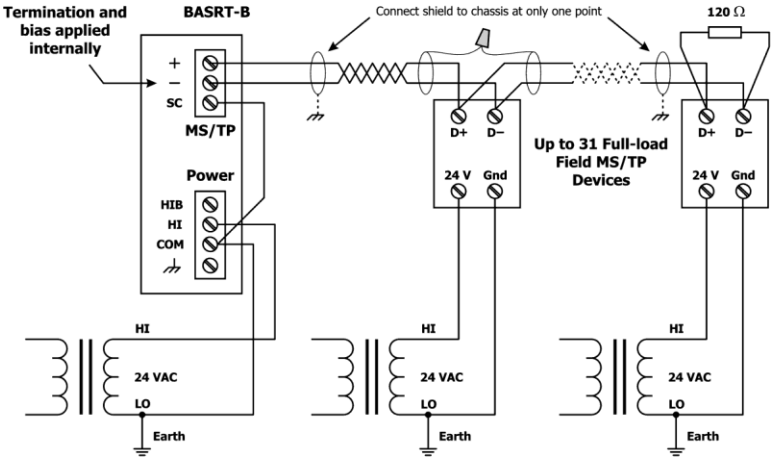

Figure 9 — 2-wire MS/TP Bus with Separate Power Sources

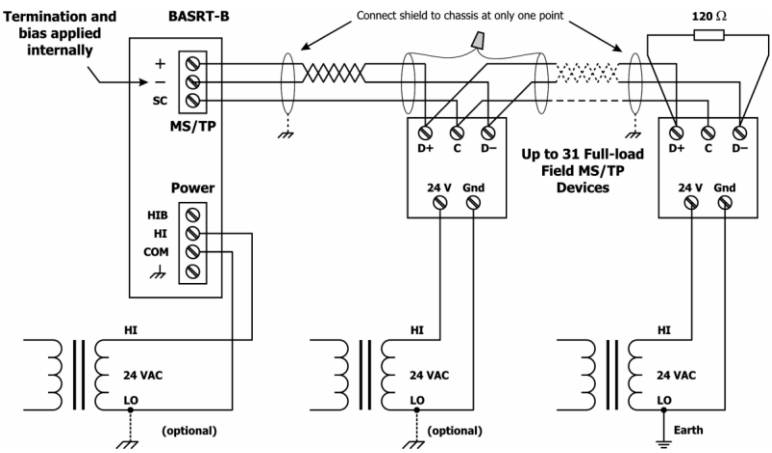

Figure 10 — 3-wire MS/TP Bus with Separate Power Sources

3.2 Limited Power Sources

The router should be powered by a limited power source complying with the requirements of the National Electric Code (NEC) article 725 or other international codes meeting the same intent of limiting the amount of power of the source. Under NEC article 725, a Class 2 circuit is that portion of the wiring system between the load side of a Class 2 power source and the connected equipment. For AC or DC voltages up to 30 volts, the power rating of a Class 2 power source is limited to 100 VA. The transformer or power supply complying with the Class 2 rating must carry a corresponding listing from a regulatory agency such as Underwriters Laboratories (UL).

4 LEDs

Power	glows green if power supplied to the unit is proper
Ethernet	glows solid for a valid link (green for 100 Mbps or yellow for 10 Mbps) and flashes to show activity
MS/TP	flashes green when receiving valid MS/TP traffic

5 Operation

5.1 MS/TP Port

The MS/TP port uses an isolated EIA-485 transceiver connected to a 3-pin removable connector (*Figure 1*). The transceiver + and – lines tie to + and – pins of the connector. The *SC* pin ties to the transceiver ground. *You MUST connect the SC pin to the MS/TP segment signal common —* ***or MS/TP communication will fail!***

In *Figure 11* a simplified schematic of the isolated EIA-485 transceiver is shown. Notice that the transceiver common (*SC*) is electrically isolated from the router power supply common (*COM*) through the use of opto-isolators and an isolated DC-DC converter. An isolated EIA-485 transceiver offers less chance of damage to the transceiver from high common-mode voltages, but there is still a risk. Surge suppression is applied between the two differential inputs and between each input and ground. Since the transceiver is electrically isolated, the transceiver circuit common must be brought out for connection to the other devices on the MS/TP network. This is accomplished by pin *SC*. The differential pair is labelled + and – and corresponds to the same designations in the BACnet MS/TP standard. This requires a three-wire connection to the MS/TP network. Connecting other isolated MS/TP devices is no problem since each device requires a 3-wire connection. Just make corresponding connections. For non-isolated MS/TP devices, usually only a 2-wire connection is provided. The third wire is the power supply common. In this situation, the *SC* connection ***MUST*** be made to the power supply common of the non-isolated device. Refer to the device vendor instructions for connecting such a device.

In a router application where one connection is made to Ethernet and the other to MS/TP, the location of the router is probably at the end of the MS/TP bus segment and therefore both bias and termination must be applied to the segment end. The router is shipped with bias and termination applied, but this can be changed by removing three jumpers. This should be done if the router is to be connected anywhere between the end MS/TP devices.

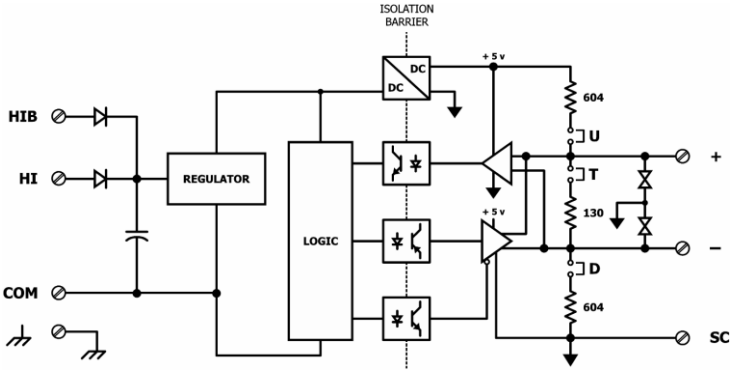

Figure 11 — Isolated EIA-485 Transceiver Circuitry

The router can address 254 MS/TP devices and supports 31 full-load devices on the local bus at rates of 9600, 19200, 38400, or 76800 bps.

5.1.1 EIA-485 Bias and Termination Jumpers

After removing the BASRT-B cover, three jumpers are accessible on a 6-pin jumper block located near the MS/TP connector. These impart 604 ohms of pull-up and pull-down bias at jumpers U and D, and 130 ohms of termination impedance for the T jumper. With all three jumpers installed, the effective termination resistance is 120 Ω — consistent with the BACnet standard. If the BASRT-B is not installed at the end of a segment, remove all the jumpers and install 120 Ω at the far end of the bus.

5.2 Ethernet Port

This port offers a shielded RJ-45 connector. Through auto-negotiation and Auto-MDIX, it automatically matches its duplex setting, data rate and communication pair usage to whatever is needed by the attached equipment. Thus, any CAT5 cable (cross-over or straight-through) may be used to connect to the Ethernet.

5.3 Reset Switch

To reset the router to its default values (except for configuration settings), use a paperclip or similar tool to press the *Reset IP* button for at least 3 seconds while the router is powered. Then release the reset button and remove power from the router for 3 seconds. Restore power and the unit will now use default IP values and User ID/Password.

6 Webpage Configuration

Each router contains an interactive web server, accessible from any Internet-compatible PC on the local network and compatible with recent versions of Internet Explorer (5.0 or later, suggested) or Netscape Navigator (7.1 or later, required). It is factory-programmed with a default IP address of 192.168.92.68 and a Class C subnet mask of 255.255.255.0 (/24).

Figure 12 shows the setup for accessing the MS/TP network using BASRT-B, a computer for configuration, and a connection to the MS/TP network.

To configure the router, attach it to a computer with an Ethernet connection and a standard web browser. For initial configuration, the PC chosen for the procedure should temporarily have its IP address modified as illustrated in *Figure 13* — which employs a Windows® XP example.

The example in *Figure 13* suggests an IP address for the PC of 192.168.92.**69**, but the final quad of the address could be any value from 3 to 254 — except for **68** which is used by the router. After the IP address of the PC has been set to the same subnet as the router, a browser can access the router via its default IP address.

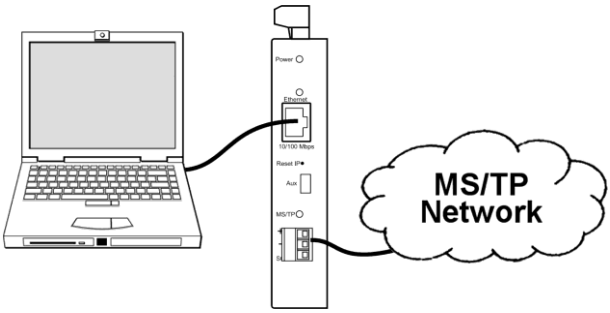

Figure 12 — Setup for Initial IP Address Configuration

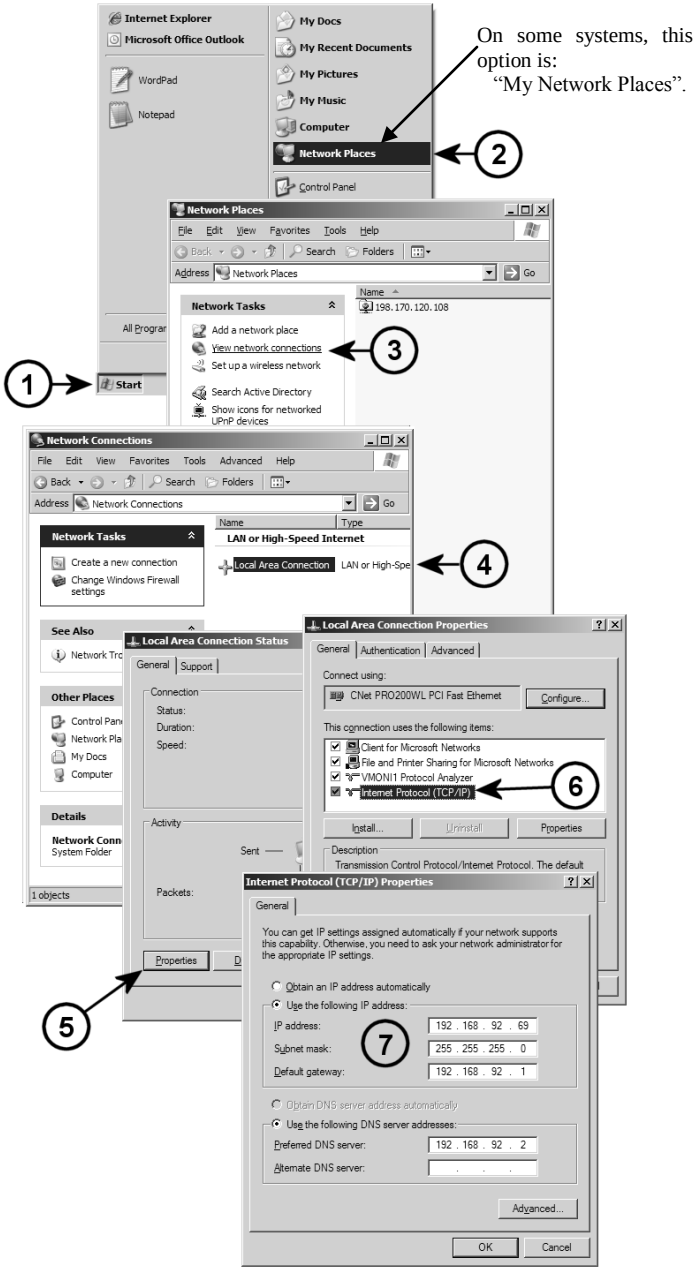

Figure 13 — Steps for Changing the IP Address of the PC Used for Setup

After entering the router's IP address into your browser's address field, you will see the Logon Screen of *Figure 14*. The default value of both the *User Name* and *Password* is **admin**.

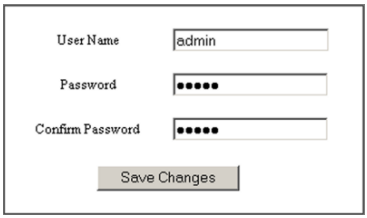

Figure 14 — Router Logon Screen

After successfully logging on, the Router Configuration Page initially appears with the default values as shown in *Figure 15*.

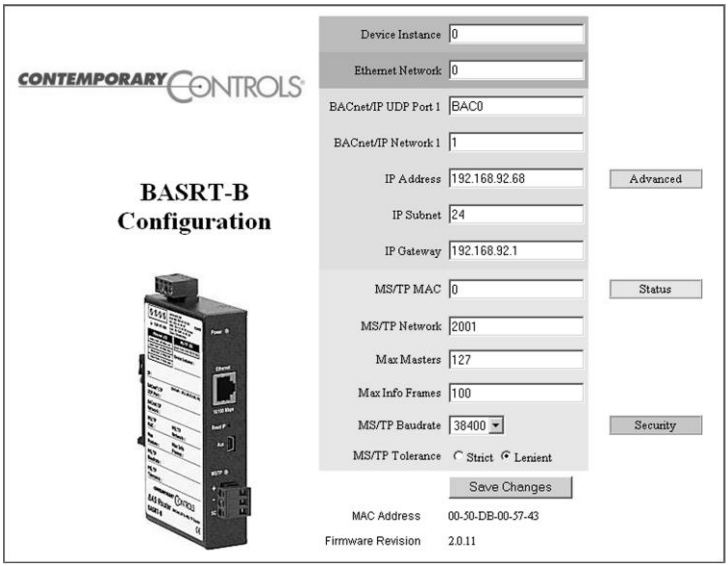

Figure 15 — Router Configuration Page with Default Values

Each configuration parameter is explained on the following pages. When *Save Changes* is selected, the parameters are stored to non-volatile memory, the unit will automatically reboot (in a few seconds) and the changes will take effect.

Three buttons *in Figure 15* (*Advanced*, *Status* and *Security*) access more screens and are discussed in Section 7.

6.1 Device Parameters

6.1.1 Device Name (Default Value = *BASRT-Bxxxxxx*)

Starting with firmware 2.6.0, this editable field (not shown in *Figure 15*) was added at the top of the main page because some system software *requires* a unique device object name for each device on the network. It can be up to 20 characters and defaults to a unique name of the form BASRT-B*XXXXXX* — where the *X*s are replaced with the final six characters of the router's Ethernet MAC address.

6.1.2 Device Instance (Default Value = 0)

The router's device instance is a 22-bit value (0–4,194,302). Do not use 4,194,303 which is reserved by BACnet. Each BACnet device within the same BACnet internetwork must have a unique device instance. One must be assigned to the BASRT-B.

6.2 BACnet Ethernet (0 disables BACnet Ethernet)

6.2.1 Ethernet Network (Default Value = 0)

Most BACnet communication that is carried by Ethernet uses the *BACnet/IP* protocol. However, there are still instances in which the older *BACnet Ethernet* protocol (ISO 8802-3) is found. The BASRT-B allows these two protocols to communicate.

BACnet Ethernet uses *Ethernet MAC addresses* for station addressing — unlike BACnet/IP which addresses messages by means of *Internet Protocol (IP) addresses*. Each Ethernet MAC address (often called the *physical* address) is unique to the Ethernet network adapter. It is permanently embedded into the adapter during manufacture and cannot be changed. It is composed of six two-digit *hexadecimal* numbers (00–FF). An example of an Ethernet MAC address is:

`00-08-A1-10-BD-EB`

Each Ethernet network adapter has the ability to store an IP address that is *changeable*. This IP address is typically represented as four *decimal* values (each is 0–255) separated by dots. Often called the *dotted quad format*, an example is:

`192.168.92.1`

NOTE: Although they may share the same Ethernet physical network, BACnet Ethernet devices as well as BACnet/IP devices must have their own unique network number and these two networks *cannot communicate unless their messages pass through a router*. These network numbers must be in the range of 1–65534 (0 and 65535 are reserved). If the BACnet Ethernet network value is left at its default value of 0, the BACnet Ethernet function within the BASRT-B ***will be disabled***. Also, to prevent erratic traffic due to message loops, ***an IP subnet must have only one router enabled for BACnet Ethernet!***

6.3 BACnet/IP Parameters

6.3.1 BACnet/IP UDP Port (Default Value = 0xBAC0)

This 16-bit hex value (BAC0–BACF) is set to BAC0 by default. Usually, this default value should not be changed. In typical networks, each BACnet/IP device will have the same UDP port

6.3.2 BACnet/IP Network (Default Value = 1)

Like all networks in the BACnet internetwork, the BACnet/IP network must have a unique number (1–65534). Do not use addresses 0 or 65535 since these addresses are reserved.

6.3.3 IP Address (Default Value = 192.168.92.68)

The IP address of the router can be 0.0.0.1–255.255.255.254. A private address is usually assigned to the BASRT-B.

6.3.4 IP Subnet (Default Value = 24)

This value (0–30 in the "slash" notation) is the number of *bits* with a "1" in the mask. The default value of 24 corresponds to 255.255.255.0 in the dotted *decimal* format. All devices on the same subnet which communicate via BACnet/IP should use the same subnet mask.

6.3.5 IP Gateway (Default Value = 192.168.92.1)

The default gateway for the IP stack is a dotted decimal number in the range of 0.0.0.0–255.255.255.254. This will be the IP address of your local IP router — if one exists.

6.4 MS/TP Parameters

6.4.1 MS/TP MAC (Default Value = 00)

This is the unique 8-bit (0–127) MAC address of the router's MS/TP port, in decimal. Lower MAC address numbers are preferred with the default recommended. It is further recommended that all other BACnet devices attached to the same MS/TP network be assigned consecutive MAC addresses beginning with 1 without allowing any gaps in addressing. Slave devices may have MAC addresses of 128–254, but MAC address 255 is reserved.

6.4.2 MS/TP Network (Default Value = 2001)

This 16-bit decimal network number (1–65534) must be unique for all BACnet networks within the BACnet internetwork. No other networks, regardless of type, can have the same network number. Do not use addresses 0 or 65535 since these are reserved.

6.4.3 Max Masters (Default Value = 127)

Only master nodes participate in the MS/TP token-passing process. The highest master MAC address (in decimal) in the MS/TP network is 127 and you should use 127 if you are unsure of other MS/TP device addresses. Each MS/TP device should use this same value. For a value in this field to be proper, it must equal or exceed the highest MAC address for any master on the network. Optimum performance occurs when this value:

1. ***equals*** the highest MAC address of any master, and
2. all masters use ***sequential*** MAC addresses starting with 1

Since many BACnet devices do not allow this parameter to be changed, leave the BASRT-B at the default value.

6.4.4 Max Info Frames (Default Value = 100)

This is the maximum number of messages that can be routed onto the MS/TP network by the router per token pass. Its range is 1–100, and typical values are 20–40. Smaller values provide less access to the MS/TP network from the BACnet/IP network because they give native MS/TP messages higher priority than

those passed by the router from BACnet/IP. The default value usually provides good performance.

6.4.5 MS/TP Baud Rate (Default Value = 38400)

The baud rate of the MS/TP network can be 9600, 19200, 38400 or 76800 bps. All MS/TP devices on the same MS/TP network must use the same baud rate. On power up, as the router polls for other masters, autobauding devices adjust to its baud rate.

6.4.6 MS/TP Tolerance (Default Selection = Strict)

This setting determines the degree to which interoperability with devices is successful. The Lenient option is less efficient for traffic flow but optimises interoperability. A slight improvement in performance will be realised by selecting the *Strict* setting.

7 Advanced Features

The right side of the *Router Configuration Page* (*Figure 15*) has the following three buttons that access advanced features:

Advanced	This accesses the *Advanced Configuration Page* that is discussed in Section 7.1.
Status	This accesses the *Status Screen* that is discussed in Section 7.2
Security	This accesses the *Security Screen* that is discussed in Section 7.3

7.1 Advanced Configuration Page

The BACnet discovery process uses *broadcast* messages, but broadcasts are blocked by an IP router. To deal with subnets, a BACnet/IP Broadcast Management Device (BBMD) must be used.

You may deploy the BASRT-B in a situation in which BACnet communication is confined to just one IP subnet. In such a case, advanced configuration is unneeded. But if you are dealing with more than one IP subnet, you will need the BBMD functionality offered in the advanced configuration screen shown in *Figure 16*.

To implement BBMD in your router, select the *BBMD Enable* checkbox in the upper section of the screen. (NOTE: If this box is not checked, you will get a ***blank screen*** when you attempt to view *Figure 17* or *Figure 18*.) Unless your router must deal with multiple IP networks, in the *BBMD UDP Port* drop-down menu accept the "Primary" default setting.

Warning: If you enable BBMD when it is not needed, the router will attempt to find devices that are not present and thus traffic flow will be impaired and communication will suffer.

If the router is used to route between two BACnet/IP networks, the *Secondary BACnet/IP UDP Port* and *Secondary BACnet/IP Network* numbers must be entered.

When the router is used in a NAT environment and its local IP address is non-routable (for example, 192.168.x.y) and it is communicating with BACnet devices on the other side of the NAT firewall, the *Public IP Address* is used in the Forwarded-

NPDU IP Address field. The NAT router must be configured such that communications to the NAT router on the Secondary BACnet/IP network port are port forwarded to the BAS Router. The *Public IP Address* of the BAS Router will be the public IP address of the NAT router.

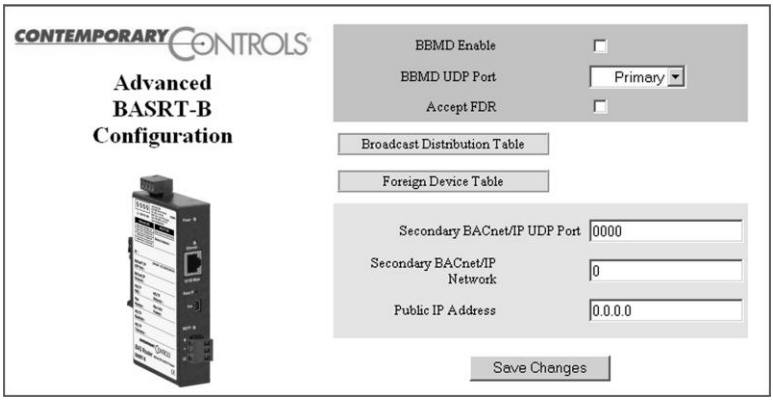

Figure 16 — The Advanced Configuration Screen

If you click the *Broadcast Distribution Table* (BDT) button, the screen of *Figure 17* appears (if the *BBMD Enable* box is checked). Enter the IP addresses of all BBMD devices to which the BAS Router will communicate. ***Do not include the BAS Router's own IP address.*** Normally you will set the Broadcast Distribution Mask (BDM) to 255.255.255.255. If the BAS Router will communicate through an IP router which can forward broadcasts, then set the BDM to the subnet mask assigned to the destination subnet.

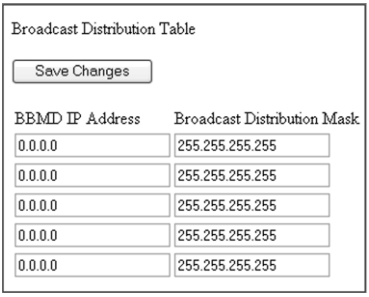

Figure 17 — The Broadcast Distribution Table

If you click the button labelled *Foreign Device Registration* (FDR), the screen shown in *Figure 18* appears (unless you have not checked the *BBMD Enable* box). This screen will report all devices that have registered with the BASRT-B as Foreign Devices and how long they will remain registered unless a re-registration occurs.

Foreign Device Registrations

IP Address Port TTL Remaining Time

Figure 18 — Foreign Device Registrations

7.2 Status Screen

The Status Screen depicted in reports the traffic of the various protocols handled by the BASRT-B. It shows the number of messages received and transmitted for each of the supported networks. “BIP 1” is the primary BACnet/IP port and “BIP 2” is the secondary port.

BIP 1 Incoming Packets=440
BIP 1 Outgoing Packets=440
BIP 2 Incoming Packets=0
BIP 2 Outgoing Packets=0
BACnet/Ethernet Incoming Packets=0
BACnet/Ethernet Outgoing Packets=1
MSTP Incoming Packets=439
MSTP Outgoing Packets=440
SilenceTimer=6
EventCount=62
flags=0 ()
RFSM state=02 Header
MNSM state=01 Idle
Next Station=1
Poll Station=0
Available Memory=34859

Figure 19 — Status Screen

“Available Memory” (at the bottom of the list) is the amount of RAM remaining after buffers are allocated. If one network is temporarily offline and another network is attempting to communicate with this network, the available memory may drop very low until the offline network returns to an online condition.

The remaining information in *Figure 19* reports the instantaneous MS/TP state of the router and is documented in the MS/TP portion of the BACnet standard. The following are noteworthy:

"RFSM" is the current *Receive Frame State Machine* state.

"MNSM" is the current *Master Node State Machine* state.

Starting with firmware 2.6.0, the Status Screen refreshes automatically; previous versions required a refresh of the browser page. Upon refresh, you can watch the router MS/TP state change and gain insight into the state of the MS/TP network (as seen by the router). For example, if "MNSM" always reports SoleMaster or PollForMaster, after repeated refreshes, then the router cannot communicate with any MS/TP devices.

"Next Station" is the MS/TP MAC address of the device to which the router will next pass the token. This value may change if devices leave or enter the network — and when the router searches for devices on the network, as per the BACnet MS/TP standard.

7.3 Security Screen

The Security Screen of *Figure 20* displays the default *User Name* which is "admin". The default *Password* is also "admin". Each of these values can be up to 10 characters in length. You are encouraged to change these login values to prevent unauthorized access to the BASRT-B.

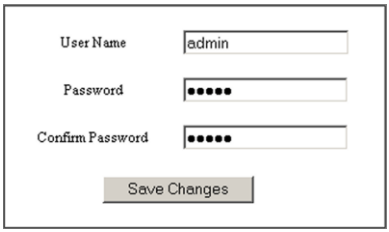

Figure 20 — Security Screen

8 Warranty

Contemporary Controls (CC) warrants this product to the original purchaser for two years from the product shipping date. Product returned to CC for repair is warranted for one year from the date the repaired product is shipped back to the purchaser or for the remainder of the original warranty period, whichever is longer.

If the product fails to operate in compliance with its specification during the warranty period, CC will, at its option, repair or replace the product at no charge. The customer is, however, responsible for shipping the product; CC assumes no responsibility for the product until it is received.

CC's limited warranty covers products only as delivered and does not cover repair of products that have been damaged by abuse, accident, disaster, misuse, or incorrect installation. User modification may void the warranty if the product is damaged by the modification, in which case this warranty does not cover repair or replacement.

This warranty in no way warrants suitability of the product for any specific application. IN NO EVENT WILL CC BE LIABLE FOR ANY DAMAGES INCLUDING LOST PROFITS, LOST SAVINGS, OR OTHER INCIDENTAL OR CONSEQUENTIAL DAMAGES ARISING OUT OF THE USE OR INABILITY TO USE THE PRODUCT EVEN IF CC HAS BEEN ADVISED OF THE POSSIBILITY OF SUCH DAMAGES, OR FOR ANY CLAIM BY ANY PARTY OTHER THAN THE PURCHASER.

THE ABOVE WARRANTY IS IN LIEU OF ANY AND ALL OTHER WARRANTIES, EXPRESSED OR IMPLIED OR STATUTORY, INCLUDING THE WARRANTIES OF MERCHANTABILITY, FITNESS FOR PARTICULAR PURPOSE OR USE, TITLE AND NONINFRINGEMENT.

9 Returning Products for Repair

Return the product to the location where it was purchased by following the instructions at the URL below:

www.ccontrols.com/rma.htm

10 Declaration of Conformity

Information about the regulatory compliance of this product can be found at the URL below:

www.ccontrols.com/compliance.htm